Identification of Sources Contributing to Ammonia Deposition in Rocky Mountain National Park by Isotope Ratio Mass Spectrometry

Joshua Stratton[1], Thomas Borch[1,2,*], Jeffrey L. Collett, Jr.[3], Jay Ham[2], and Jessica G. Davis[2]

[1]Department of Chemistry, [2]Department of Soil and Crop Sciences, [3]Department of Atmospheric Science,

Colorado State University, Fort Collins, CO 80523-1170

Introduction

Colorado State University (CSU) is pleased to provide the first annual report for the project entitled "Identification of Sources Contributing to Ammonia Deposition in Rocky Mountain National Park by Isotope Ratio Mass Spectrometry". The summer of 2008 marked the startup of the project.

Major Objectives for Year One (7 months):

- Technical literature review
- Development of an experimental approach for ammonia nitrogen isotope investigations of field samples
- Development of a controlled laboratory system to study isotopic compositions, fractionations and fluxes for future laboratory based ammonia experiments

To enable analysis of the isotopic ratio of ammonia nitrogen by isotope ratio mass spectrometry (IR-MS) one must first convert the ammonia into a salt such as $(NH_4)_2SO_4$ using a distillation apparatus. Most necessary distillation equipment arrived in June and first distillation trials followed. An array of distillation techniques existed in the literature from chemical transformations using heavy magnesium oxide (MgO), sodium hydroxide (NaOH), or both. The goal was to develop a distillation technique that includes a high recovery of nitrogen (N), >90 %, a short sample preparation time and minimal shifts (i.e., fractionation) in delta 15 signals. The next objective was to design an experimental approach for ammonia field sampling and laboratory studies. Preliminary field sampling was conducted within Fort Collins, CO in December. A laboratory system for fundamental mechanistic studies of ammonia transformation pathways was successfully constructed in January and is currently being used for our first series of experiments.

Research Summary

After reviewing the literature and commercially available materials and published methods for ammonium distillation, it was decided that a steam distillation was best suited. A commercial glass distillation apparatus was

*Corresponding author contact: phone 970-491-6235; email borch@colostate.edu

purchased, constructed, and preferred over custom built glassware because of price and availability. The literature offers an extensive amount of distillation methods. The two distillation trends identified were the use of magnesium oxide and/or sodium hydroxide. These two reagents were tested along with distillation time. The results showed that magnesium oxide alone was not sufficient for good ammonia recovery. The steam distillation apparatus is an ex-situ setup. Steam is generated in a 5 liter round bottom flask that can be transferred into the boiling flask. All samples and chemical reagents are added to this flask for NH_3 generation. The boiling flask is then cooled in a condenser into a sulfuric acid bath for ammonia capture.

$$2NH_4^+(aq) + SO_4^{2-}(aq) \leftrightarrow (NH_4)_2SO_4(s)$$

High N recovery and minimal delta 15 changes were the goals of most importance. However, distillation length was investigated first. The distillation efficiency was studied with change in pH because ammonia capture causes an increase in pH. Ammonium chloride (NH_4Cl) distillations were run for 50 minutes with 0.2 grams of MgO within the system. There was no observed significant change in pH from ammonia capture after six minutes; therefore distillation times did not have to exceed six minutes. Next, a recovery experiment was conducted in triplicate at various initial masses of ammonia (Table 1).

The experiment was first conducted with 0.2 grams of MgO as an ammonium transformation agent. The literature indicates that MgO can cause a large enough increase in pH to transform ammonium into ammonia. It was decided that MgO alone was not sufficient to ensure a high recovery from distillation. Furthermore, it was noted that heavy MgO should be activated by heating at 650° Celsius for two hours. Our facilities do not have that capability. Thus, a single mass of ammonia was distilled in duplicate with 4 mL of 5M NaOH was performed (the results are shown in bold in Table 1). A higher recovery (i.e., 60%) and closer delta values were observed. It was decided to continue the use of NaOH to aid in the distillation procedure. It was observed that the addition of NaOH also led to no significant pH increases after six minutes. The constant pH reflects that no ammonia is being trapped in the sulfuric acid solution. This result confirms results from the literature, therefore, six minutes is currently the distillation time of all the future samples. However, the recovery percent is still too low, 60 %, and the amount of NaOH was increased to 6 mL of 10M NaOH (we were not able to include data from this experiment due to problems with our ion chromatograph).

Table 1. Recovery and fractionation of N using steam distillation with MgO (italics) and NaOH (bold).
** NaOH method performed in duplicate*

mg N	Percent Recovery	Delta 15
0.608	*24.8 (13.2)*	*-0.18 (1.84)*
0.820	*39.2 (4.10)*	*1.58 (2.81)*
0.844*	**59.8 (1.17)**	**0.16 (0.20)**

*Corresponding author contact: phone 970-491-6235; email borch@colostate.edu

We performed a preliminary outdoor ammonia sampling experiment using a URG denuder setup. URG makes a triple annular glass denuder coated with a trapping acid, phosphorous acid, for ammonia. The experiment was designed to collect two different ambient air samples for 24 hours in duplicate using two URG denuders connected in series (to test if these denuders had the desired capacity for our future experiments. Gas collection was conducted at the Atmospheric Science building on the edge of Fort Collins, CO.

The mass collected was insufficient for isotope determination in most of the sampling periods. This result led us to use Honeycomb denuders instead because they have a higher capacity and can sample for longer periods of time. The one sample that obtained enough mass had a delta value of 7.41; however, such a small data set cannot confirm or refute any of our hypotheses (stated in our original proposal).

Current State

Construction of a laboratory apparatus for the study of intact soil cores for mechanistic pathway experiments is completed as well as some preliminary mass balance studies. This apparatus will provide a controllable system that will allow us to test the impact of environmental variables (e.g., relative humidity, temperature and soil type) on ammonia volatilization from a soil or other media. A schematic of the apparatus is shown in Figure 1. This system will be used to study chemical pathways for ammonia. Additionally, this system allows for fractionation studies to quantify delta N-15 shifts for chemical/biological pathways.

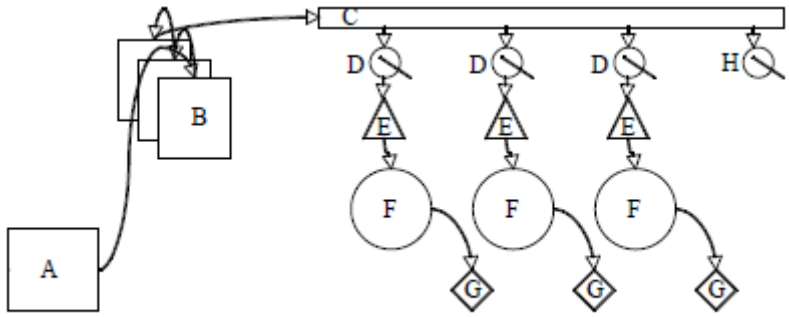

Figure 1:
A. Dual Head Pump **B.** Saline solutions for relative humidity control **C.** PVC manifold **D.** on/off valves for each chamber **E.** 10 L min^{-1} flow meter **F.** modified chamber (Figure 3) **G.** Acid trap for volatilized ammonia **H.** bleed valve to release extra pressure

Our group has previously performed studies with this apparatus to optimize its design for uniform, turbulent flow in the chamber, as well as, prevent preferential flow across the soil media. Figure 2 shows some preliminary studies of the impact of relative humidity (i.e., 0% and 70% RH) on ammonia volatilization from soil.

Future Studies

In the near future, the project expects to move into field sampling at CAFOs, dairy operations, wastewater treatment plants, forest fires, industry, and soils. Communications with wastewater treatment plants have given us permission to do on site sampling. We have identified several collaborators within the agricultural community which will enable us to obtain intact soil core and manure samples and allow on-farm gas phase sampling within the next year of this study.

The laboratory chamber will be used for studies of the impact of water saturation, temperature, and humidity on ammonia volatilization from soil surfaces and ammonia fractionation. Moreover, the apparatus will be used to analyze ammonia volatilization and fractionation from different soil types (intact), animal and synthetic fertilizers, urine, biosolids. Agrotain Plus (*brandname*) is a new urease inhibitor that is supposed to limit the amount of ammonia released from urea in animal waste. We intend to test the effectiveness of this inhibitor on intact soil cores using the laboratory apparatus described above. One experiment will be conducted by applying manure and urease inhibitor to a soil surface and the second experiment will be conducted by first applying the inhibitor followed by a manure application. This will test the effectiveness and the economic justification of this product.

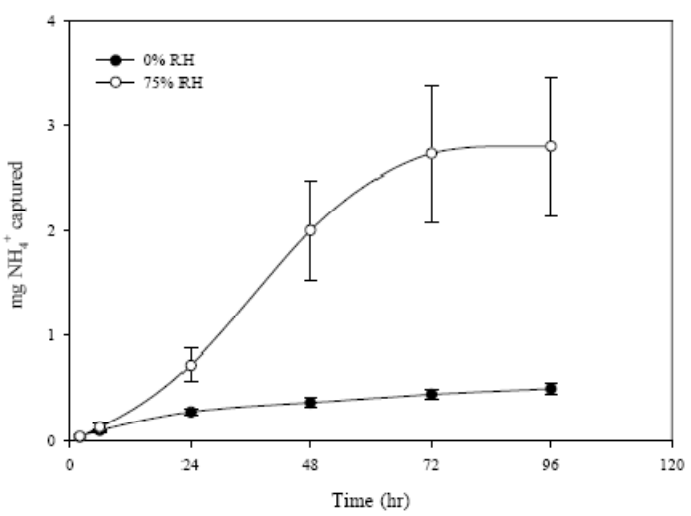

Figure 2: Ammonia volatilized from intact soil cores at 0% and 75% relative humidity (RH) for 4 days.

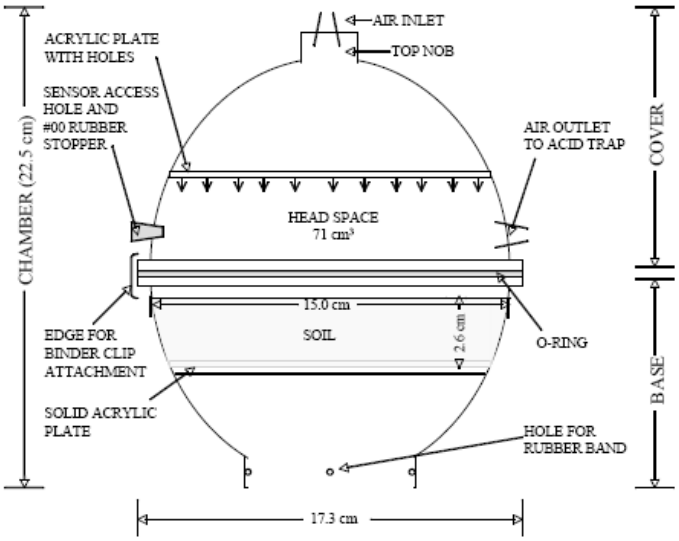

Figure 3: Schematic of chamber used in laboratory apparatus

Acknowledgement

We are thankful to the International Plant Nutrition Institute (IPNI) for their important support of this research.